CAMILLE BAUER

SINEAX VK 616, Programmable Temperature Transmitter for RTD and TC Inputs

for installation in the terminal head of a temperature sensor DIN 43 729, shape B

CE 0102 Ex II 2 (1) G

Application

SINEAX VK 616 is a two-wire head-mounted transmitter. It is designed for **measuring temperature in combination with thermocouples or resistance thermometers.** Thermocouple non-linearities are automatically compensated. The output signal is a current in the range 4…20 mA.

The input variable and measuring range are programmed with the aid of a PC and the corresponding software.

The sensor circuit is monitored for open and short-circuits and the output responds in a defined manner if one is detected.

The power supply of (12…30 V DC) is connected together with the signal by the two leads connected to the measurement output (loop powered).

*Fig. 1. Measuring transmitter SINEAX VK 616 – 71/73, input/output **not** electrically isolated.*

Fig. 2. Measuring transmitter SINEAX VK 616 – 72/74 input/output electrically isolated.

Features / Benefits

- **Input variable and measuring range programmed using PC / Simplifies project planning and engineering, short delivery times, low stocking levels**

Measured variables	Measuring ranges		
	Limits	Min. span	Max. span
Temperatures with resistance thermometers for **two, three** or **four**-wire connection			
Pt 100, IEC 60 751	– 200 to 850 °C	50 K	850 K
Ni 100, DIN 43 760	– 60 to 250 °C	50 K	250 K
Temperatures with thermocouples			
Type B, E, J, K, N, R, S, T acc. to IEC 60 584-1	acc. to type	2 mV	80 mV
Type L and U, DIN 43 710			
Type W5 Re/W26 Re, Type W3 Re/W25 Re acc. to ASTM E 988-90			

- **Optionally with or without electrical isolation between input and output / Prevents measurement errors due to potential leakage**
- **Open and short-circuit sensor circuit supervision / Defined output response should the supervision pick up**
- **Programmable with or without power supply connection**
- **Terminals with captive screws**
- **Available in type of protection "Intrinsic safety" EEx ia IIC T6** (see "Table 6: Data on explosion protection")

Basic configuration:	Measuring input	Pt 100 for three-wire connection
	Measuring range	0 … 600 °C
	Measuring output:	4 … 20 mA, linearised with temperature
	Open-circuit supervision:	Output 21.6 mA
	Response time:	Approx. 1.5/2 s (Table 3)
	Mains ripple suppression:	For frequency 50 Hz

SINEAX VK 616, Programmable Temperature Transmitter for RTD and TC Inputs

Standard versions

The following versions are available as standard versions already programmed for the **basic** configuration. It is only necessary to quote the **Order No.**:

Table 1: Standard (non-Ex) version

Version	Dimensions Ø 43 mm	**Order No.**
Not electrically isolated	Height 16.8 mm	137 845
Electrically isolated	Height 30.8 mm	137 861

Table 2: Version EEx ia IIC T6

Version	Dimensions Ø 43 mm	**Order No.**
Not electrically isolated	Height 16.8 mm	137 853
Electrically isolated	Height 30.8 mm	137 879

Please complete the Order Code 616-7.1. .... according to "Table 4: Specification and ordering information" for versions with user-specific input ranges.

Programming

A PC, the programming cable PK 610 plus ancillary cable and the programming software V 600 *plus* are required to program the transmitter. (Details of the programming cable and the software are to be found in the separate data sheet: PK 610 Le.)

The connections between
"PC ↔ PK 610 ↔ SINEAX VK 616" can be seen from Fig. 3. The transmitter can be programmed either with or without the power supply connected.

The software V 600 *plus* is supplied on one CD and runs under Windows 3.1x, 95, 98, NT and 2000.

The programming cable PK 610 adjusts the signal level between the PC and the transmitter SINEAX VK 616.

The programming cable PK 610 is used for programming both standard and Ex versions.

It is possible to programme the temperature transmitter installed into the hazardous area.

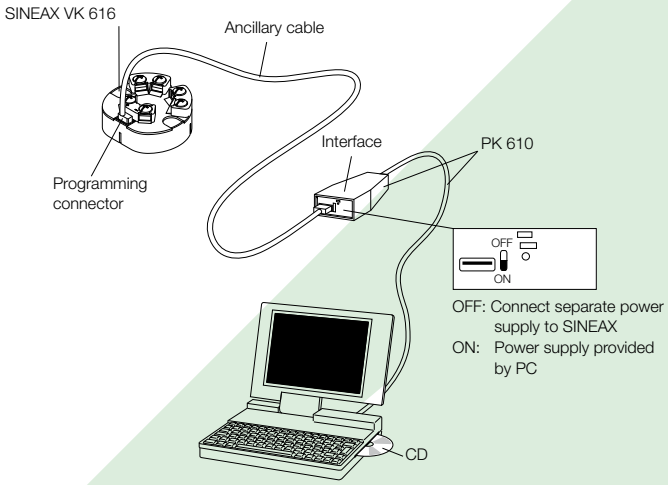

Fig. 3. Example of the set-up for programming a SINEAX VK 616 without the power supply. For this case the switch on the interface must be set to "ON".

Technical Data

Measuring input

Temperature with resistance thermometers

Measuring range limits:	See table 5
Resistance types:	Type Pt 100 (IEC 60 751) Type Ni 100 (DIN 43 760) Other sensor types configurables
Measuring current:	≤ 0.20 mA
Standard circuit:	1 resistance thermometer for **two-**, **three-** or **four-**wire connection
Input resistance:	R_i > 10 MΩ
Lead resistance:	≤ 30 Ω per lead

Temperature with thermocouple

Measuring range limits:	See table 5
Thermocouple pairs:	Type B: Pt30Rh-Pt6Rh (IEC 584) Type E: NiCr-CuNi (IEC 584) Type J: Fe-CuNi (IEC 584) Type K: NiCr-Ni (IEC 584) Type L: Fe-CuNi (DIN 43710) Type N: NiCrSi-NiSi (IEC 584) Type R: Pt13Rh-Pt (IEC 584) Type S: Pt10Rh-Pt (IEC 584) Type T: Cu-CuNi (IEC 584) Type U: Cu-CuNi (DIN 43710) Type W5 Re/W26 Re (ASTM Type W3 Re/W25 Re E 988-90)
Standard circuit:	1 thermocouple, **internal** cold junction compensation with built-in Pt100 or 1 thermocouple, **external** cold junction compensation
Input resistance:	Ri > 10 MΩ

Cold junction compensation:

Internal:	With built-in Pt 100 or with Pt 100 connected to the terminals
External:	Via cold junction thermostat 0 … 60 °C, configurable

Measuring output

(output/powering circuit)

Output signal I_A:	Impressed DC current, **linear with temperature**
Standard range:	4...20 mA, 2-wire technique
External resistance (load):	R_{ext} max. [kΩ] = $\frac{\text{Power supply [V]} - 12\text{ V}}{\text{Max. output current [mA]}}$

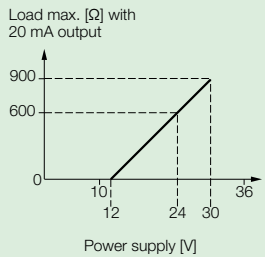

Residual ripple in output current: < 1% p.p.

Table 3: Response time

Measuring mode	Open sensor circuit	Short-circuit	Possible response times approx. [s]						
			*)	Option					
TC int. comp.	aktive	–	1.5	2.5	3.5	6.5	11	20.5	40
TC int. comp.	off	–	1.5	2.5	3.5	6.5	13.5	24.5	49.5
TC ext. comp.	aktive	–	1.5	2.5	3.5	6.5	11	20.5	40
TC ext. comp.	off	–	1.5	2.5	4	6.5	13.5	24.5	48.5
RTD 2L	aktive	–	2	2.5	3	5	9.5	17.5	33.5
RTD 3L, 4L	aktive	aktive	2	2.5	4	6.5	11.5	21	40.5
RTD 2L,3L,4L	off	off	1.5	2.5	3.5	7.5	14	26.5	50.5

*) Standard values, also valid for basic configuration

Programming connector

Interface: Serial interface

Accuracy data (acc. to EN/IEC 60 770-1)

Reference value: Measuring span

Basic accuracy: Error limits ≤ ± 0.2% at reference conditions

Reference conditions

Ambient temperature: 23 °C

Power supply: 18 V DC

Output burden: 250 Ω

Settings: Pt100, 3-wire, 0…600 °C

Additional errors (additive)

Low measuring ranges

Voltage measurement: ± 5 µV at measuring spans < 10 mV

Resistance thermometer: ± 0.3 K at measuring spans < 400°C

Thermocouple:

Type U, T, L, J, K, E: ± 0.1 K at measuring spans < 200°C

Type N: ± 0.13 K at measuring spans < 320 °C

Type S, R: ± 0.42 K at measuring spans < 1000 °C

Type B: ± 0.6 K at measuring spans < 1400 °C

High initial value: (Additional error = Factor · Initial value) Factor

Voltage measurement: ± 0.1 µV / mV

Resistance thermometer: ± 0.00075 K / °C

Thermocouple:

Type U, T, L, J, K, E: ± 0.0006 K / °C

Type N: ± 0.0008 K / °C

Type S, R: ± 0.0025 K / °C

Type B: ± 0.0036 K / °C

Influence of lead resistance at resistance thermometer: ± 0.01% per Ω

Internal cold junction compensation: ± 0.5 K

Linearisation: ± 0.3%

Influencing factors

Temperature: ≤ ± (0.15% + 0.15 K) per 10 K with temperature measurement
≤ ± (0.15% + 12 µV) per 10 K with voltage measurement

Power supply influence (power supply on terminals): ≤ ± 0.005% per V

Long-time drift: ≤ ± 0.1%

Common and transverse mode influence: ≤ ± 0.2%

Open and short-circuit sensor circuit supervision

Signalling modes: Output signal programmable to…

… the value the output had immediately prior to the open or short-circuit (hold value)

… a value between 4 and 21.6 mA

Power supply

DC voltage: Supply
12...30 V DC
max. residual ripple 1% p.p.
(supply must not fall below 12 V)
Protected against wrong polarity

Installation data

Dimensions: See section "Dimensional drawings"

Housing: Lexan 940 (polycarbonate) Flammability class V-0 acc. to UL 94, self-extinguishing, non-dripping, free of halogen

Mounting position: Any

Electrical connections: Screw terminals with Philips heads for max. 2 × 1.5 mm²

Weight: Approx. 50 g

Mounting: Shape B version of terminal head held by two M4 cheese-headed screws and two springs

Standards

Electromagnetic compatibility: The standards EN 50 081-2 und EN 50 082-2 are observed

Intrinsically safe: Acc. to EN 50 020

Protection (acc. to IEC 529 resp. EN 60 529): Housing IP 40
Terminals IP 00

SINEAX VK 616, Programmable Temperature Transmitter for RTD and TC Inputs

Electrical standards:	Acc. to IEC 1010 resp. EN 61 010
Test voltage:	1500 V AC for electrically isolated version, applied between measuring input and output

Ambient conditions

IEC 68-1-1/-2/-3/-6/-27 resp. EN 60 068-2-1/-2/-3/-6/-27	Ambient tests - 1 Cold, - 2 Dry heat, - 3 Damp heat, - 6 Vibration, - 27 Shock
Ambient temperature range:	– 25 to + 80 °C at NEx and Ex (T4) at Ex (T6) dependent of Pi, see EC-type-examination Certificate
Storage temperature range:	– 40 to + 80 °C
Annual mean relative humidity:	≤ 75%, no moisture condensation
Altitude:	2000 m max.
Indoor use statement	

Table 4: Specification and ordering information (see also Table 1 and 2: Standard versions)

Features, Selection	Blocking code	no-go with blocking code	Article No./ Feature
Order Code 616 – xxxx xxxx xxx			**616 –**
1. Housing			
For installation in a terminal head DIN 43 729, shape B			7
2. Version			
Standard, not electrically isolated			1
Standard, electrically isolated			2
EEx ia IIC T6, not electrically isolated			3
EEx ia IIC T6, electrically isolated			4
3. Configuration			
Basic configuration, programmed, (Pt100, 3-wire, 0 … 600 °C)	G		0
All types with basic configuration are available as standard versions, see table 1 and 2, specification complete!			
Configured to order			1
The following features 4 to 11 must be fully specified!			
4. Measuring unit			
Temperatures in °C			1
Temperatures in °F		G	2
Temperatures in K		G	3
5. Measuring mode, input connection			
Thermocouple			
Internal cold junction compensation, with built-in Pt100	T	G	1
External cold junction compensation t_K	T	G	2
Specify external cold junction temperature tK (in °C, °F or K, acc. to specification in Feature 4), any value between 0 and 60 °C or equivalent.			
Resistance thermometer			
Two-wire connection R_L [Ω]	R	G	3
Specify total lead resistance RL [Ω], any value between 0 and 60 Ω			
Three-wire connection, R_L ≤ 30 Ω / wire	R		4
Four-wire connection, RL ≤ 30 Ω / wire	R	G	5

Features, Selection			Blocking code	no-go with blocking code	Article No./ Feature
Order Code 616 – xxxx xxxx xxx					**616 –**
6. Sensor type / measuring range					
Sensor type / beginning … end value of measuring range					
RTD Pt 100	Range			T	1
RTD Ni 100	Range			GT	2
RTD Pt … [Ω]	Range			GT	3
RTD Ni … [Ω]	Range			GT	4
TC Type B	Range			GR	B
TC Type E	Range			GR	E
TC Type J	Range			GR	J
TC Type K	Range			GR	K
TC Type L	Range			GR	L
TC Type N	Range			GR	N
TC Type R	Range			GR	R
TC Type S	Range			GR	S
TC Type T	Range			GR	T
TC Type U	Range			GR	U
TC W5-W26Re	Range			GR	W
TC W3-W25Re	Range			GR	X
Specify measuring range in [°C], [°F] or [K]; refer to table 5 for the operating limits for each type of sensor. Lines 3 and 4: Specify resistance in Ω at 0 °C, any value between 50 and 4000 Ω					
7. Output characteristic					
Standard 4 … 20 mA					0
Inversely 20 … 4 mA				G	1
8 Open and short-circuit sensor signalling					
Output response for an open or short-circuit* sensor					
Output 21.6 mA					0
Output (any value between 4 and < 21.6 mA)	[mA]			G	1
Hold output at last value				G	2
No signal				G	A
**) The short-circuit signal is only active for the RTD measuring mode ≥ 100 Ω at 0 °C and three or four-wire connection.*					
9. Output time response					
Standard setting time approx. 2 s					0
Setting time (admissible values see Table 3)	[s]			G	9
10. Mains ripple suppression					
Frequency 50 Hz					0
Frequency 60 Hz				G	1
11. Test certificate					
Without test certificate					0
Test certificate in German				G	D
Test certificate in English				G	E

Lines with letter(s) under "no-go" cannot be combined with preceding lines having the same letter under "Blocking code".

SINEAX VK 616, Programmable Temperature Transmitter for RTD and TC Inputs

Table 5: Temperature measuring ranges

Measuring ranges [°C]	Resistance thermometers		Thermocouples											
	Pt100	Ni100	B	E	J	K	L	N	R	S	T	U	C [1]	D [2]
0... 40	X			X	X		X							
0... 50	X	X		X	X	X	X				X	X		
0... 60	X	X		X	X	X	X				X	X		
0... 80	X	X		X	X	X	X	X			X	X		
0... 100	X	X		X	X	X	X	X			X	X		
0... 120	X	X		X	X	X	X	X			X	X		
0... 150	X	X		X	X	X	X	X			X	X	X	
0... 200	X	X		X	X	X	X	X			X	X	X	X
0... 250	X	X		X	X	X	X	X			X	X	X	X
0... 300	X			X	X	X	X	X	X	X	X	X	X	X
0... 400	X			X	X	X	X	X	X	X	X	X	X	X
0... 500	X			X	X	X	X	X	X	X		X	X	X
0... 600	X			X	X	X	X	X	X	X		X	X	X
0... 800	X		X	X	X	X	X	X	X	X			X	X
0... 900			X	X	X	X	X	X	X	X			X	X
0...1000			X	X	X	X		X	X	X			X	X
0...1200			X		X	X		X	X	X			X	X
0...1500			X						X	X			X	X
0...1600			X						X	X			X	X
0...1800			X										X	X
0...2000													X	X
50... 150	X	X		X	X	X	X	X			X	X		
100... 300	X			X	X	X	X	X			X	X	X	X
200... 500	X			X	X	X	X	X	X	X		X	X	X
300... 600	X			X	X	X	X	X	X	X		X	X	X
600... 900			X	X	X	X	X	X	X	X			X	X
600...1000			X	X	X	X		X	X	X			X	X
900...1200			X		X	X		X	X	X			X	X
600...1600			X						X	X			X	X
600...1800			X										X	X
−10... 40	X	X		X	X	X	X					X		
−30... 60	X	X		X	X	X	X	X			X	X		
Measuring range limits [°C]	−200 to 850	−60 to 250	0 to 1820	−270 to 1000	−210 to 1200	−270 to 1372	−200 to 900	−270 to 1300	−50 to 1769	−50 to 1769	−270 to 400	−200 to 600	0 to 2315	0 to 2315
	ΔR min. 15 Ω at final value [3] ≤ 400 Ω ΔR min. 150 Ω at final value > 400 Ω max. final value 4000 Ω $\frac{\text{Initial value}}{\Delta R} \leq 10$		Δ U min. 2 mV, max. 80 V $\frac{\text{Initial value}}{\Delta U} \leq 10$											

[1] W5 Re W26 Re (ASTM E 988-90)
[2] W3 Re W25 Re (ASTM E 988-90)
[3] For two-wire connection, the final value is made up of the measured final value [Ω] plus the total resistance of the leads.

Table 6: Data on explosion protection Ex II 2 (1) G

Order Code	Type of protection Marking	Electrical data acc. to Certificate: Sensor input	Electrical data acc. to Certificate: Output of device	Certificate	Mounting location
616 - 73	EEx ia IIC T6	U_O = 6 V I_O = 15 mA P_O = 39 mW C_O = 990 nF L_O = 5 mH	U_I = 30 V I_I = 160 mA P_I = max. 1 W* C_I = 0 L_I = 0	EC-type-examination Certificate ZELM 99 ATEX 0010	**Within** the hazardous area, zone 1 and 2**
616 - 74	EEx ia IIC T6	U_O = 6 V I_O = 8 mA P_O = 26 mW C_O = 1194 nF L_O = 7 mH	U_I = 30 V I_I = 160 mA P_I = max. 1 W* C_I = 0 L_I = 0	EC-type-examination Certificate ZELM 99 ATEX 0043	

* *Ambient temperature Ex: – 25 °C … max. 57 °C for type 616-73 resp. 50 °C for type 616-74 (dependent on P_I, see EC-type-examination Certificate)*

** *It is permissible for the sensor circuit to enter zone 0, however, EN 50 284 and any applicable national standards must be observed.*

Electrical connections

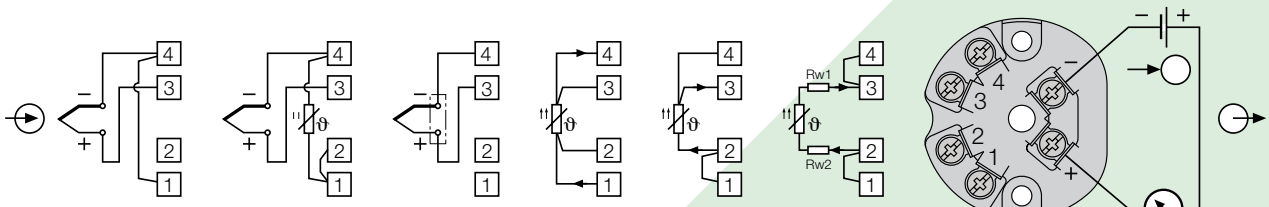

TC **Internal** cold junction compensation with built-in Pt 100

TC **Internal** cold junction compensation with Pt 100 connected to the terminals

TC **External** cold junction compensation

RTD **Four**-wire connection

RTD **Three**-wire connection

RTD **Two**-wire connection

= Measuring input

= Two-wire measuring output (measuring circuit)
(4 … 20 mA signal)
Power supply H 12 … 30 V DC

Standard accessories

1 Operating Instructions in German, French and English
1 Type examination certificate (only for “intrinsically safe” explosion-proof devices)

SINEAX VK 616, Programmable Temperature Transmitter for RTD and TC Inputs

Table 7: Accessories and spare parts

Description	Order No.
Programming cable PK 610 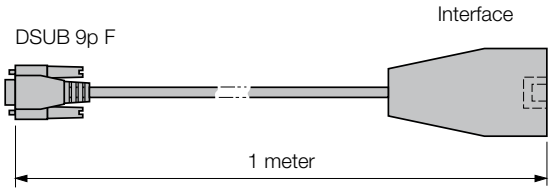 	137 887
Ancillary cable for SINEAX type VK 616 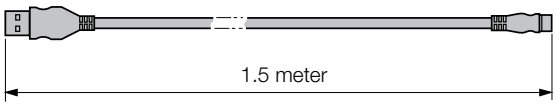 	141 440
Configuration software V 600 *plus* for SINEAX VK 616, V 608 and V 624 Windows 3.1x, 95, 98, NT and 2000 on CD in German, English, French, Spanish, Italian and Durch. **(Download free of charge under http://www.camillebauer.com)** In addition, the CD contains all configuration programmes presently available for Camille Bauer products.	146 557
Operating Instructions VK 616 Bd in German	137 902
Operating Instructions VK 616 Bf in French	142 076
Operating Instructions VK 616 Be in English	142 125

Dimensional drawings

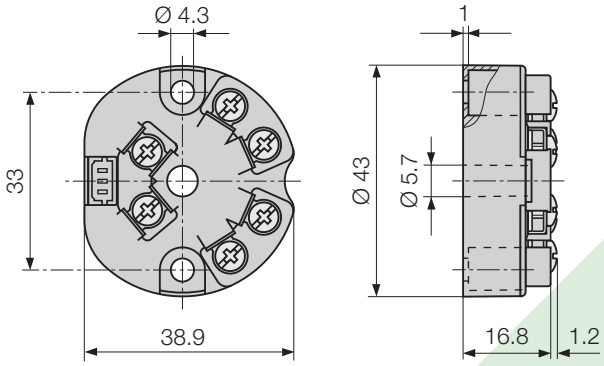

*Fig. 4. SINEAX VK 616-71/73, input/output **not** electrically isolated.*

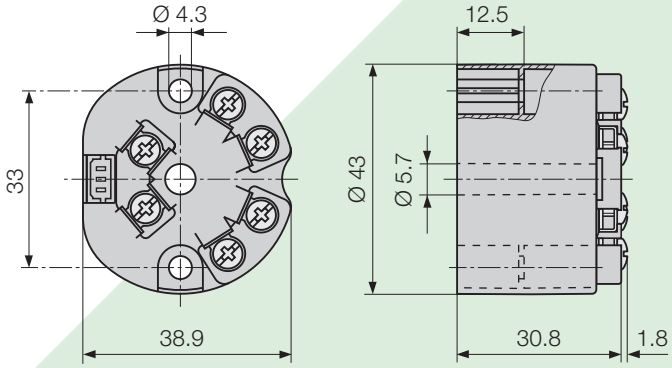

Fig. 5. SINEAX VK 616-72/74, input/output electrically isolated.

CAMILLE BAUER

Rely on us.

Camille Bauer Ltd
Aargauerstrasse 7
CH-5610 Wohlen / Switzerland
Phone: +41 56 618 21 11
Fax: +41 56 618 35 35
e-mail: info@camillebauer.com
www.camillebauer.com